Title	<Title>
Size A	Document Number <Doc>
Rev	<RevCo
Date: Saturday, September 29, 2018	Sheet 1 of 47

iREPAIR
LABORATORIO TÉCNICO
MICROSOLDADURA

Title	<Title>
Size A	Document Number <Doc>
Rev	<RevCo
Date: Saturday, September 29, 2018	Sheet 2 of 47

iREPAIR
LABORATORIO TÉCNICO
MICROSOLDADURA

Title	<Title>
Size A	Document Number <Doc>
Rev	<RevCo
Date: Saturday, September 29, 2018	Sheet 3 of 47

iREPAIR
LABORATORIO TÉCNICO
MICROSOLDADURA

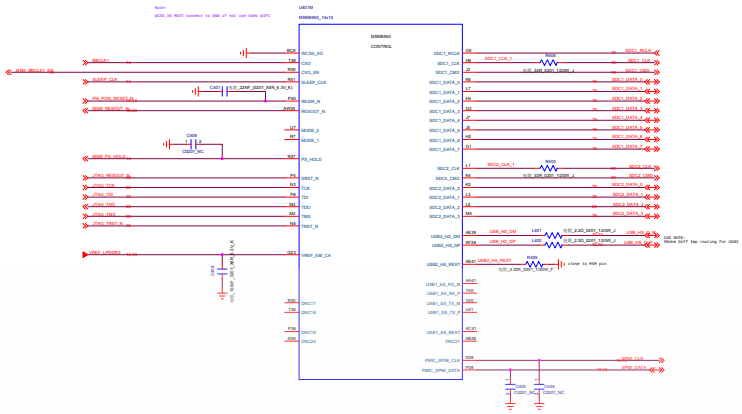

MSM8953
Control

iREPAIR
LABORATORIO TÉCNICO
MICROSOLDADURA

MSM8953
EBI

iREPAIR
LABORATORIO TÉCNICO
MICROSOLDADURA

NOTE:
Asterisks (*) indicate modem power management (MPM) wake-up pins

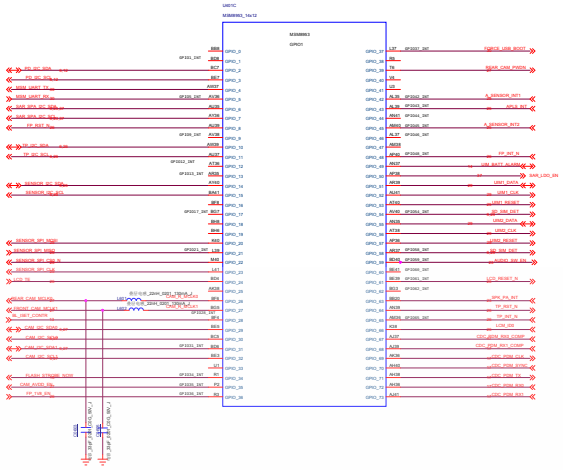

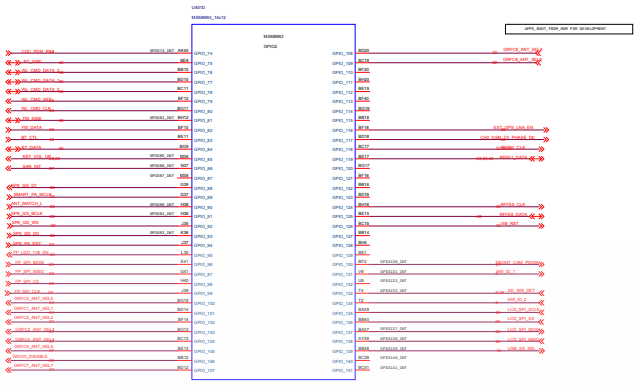

GPIO_37	FORCED_USB_BOOT
GPIO_146	WDOG_DISABLE
GPIO_148	APPS_BOOT_FROM_ROM

BOOT_CONFIG[9:1]	BOOT_CONFIG
0b000	SDC1 -> SDC2 -> USB2.0
0b001	SDC2 -> SDC1 -> USB2.0
0b010	SDC1-> USB2.0
0b011	USB2.0

Default Boot Config (0b000) is SDC1(eMMC)

I2C PULL-UP

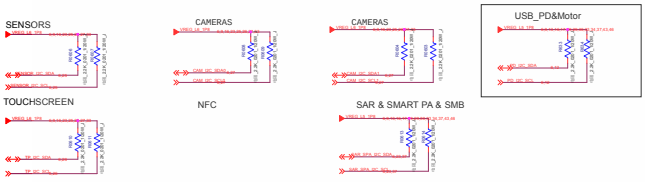

HW Board ID

NOTE:
Ensure SW sets these GPIOs (Sensor, CTP and Camera I2C bus) to inout pull down when the peripherals are powered off to eliminate leakage.

MSM8953
GPIO

iREPAIR
LABORATORIO TÉCNICO
MICROSOLDADURA

MSM8953
MIPI

iREPAIR
LABORATORIO TÉCNICO
MICROSOLDADURA

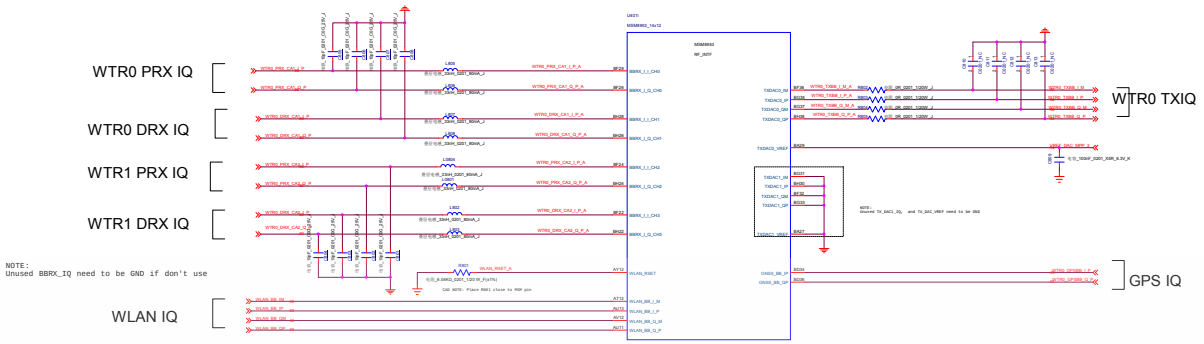

MSM8953
RF

iREPAIR
LABORATORIO TÉCNICO
MICROSOLDADURA

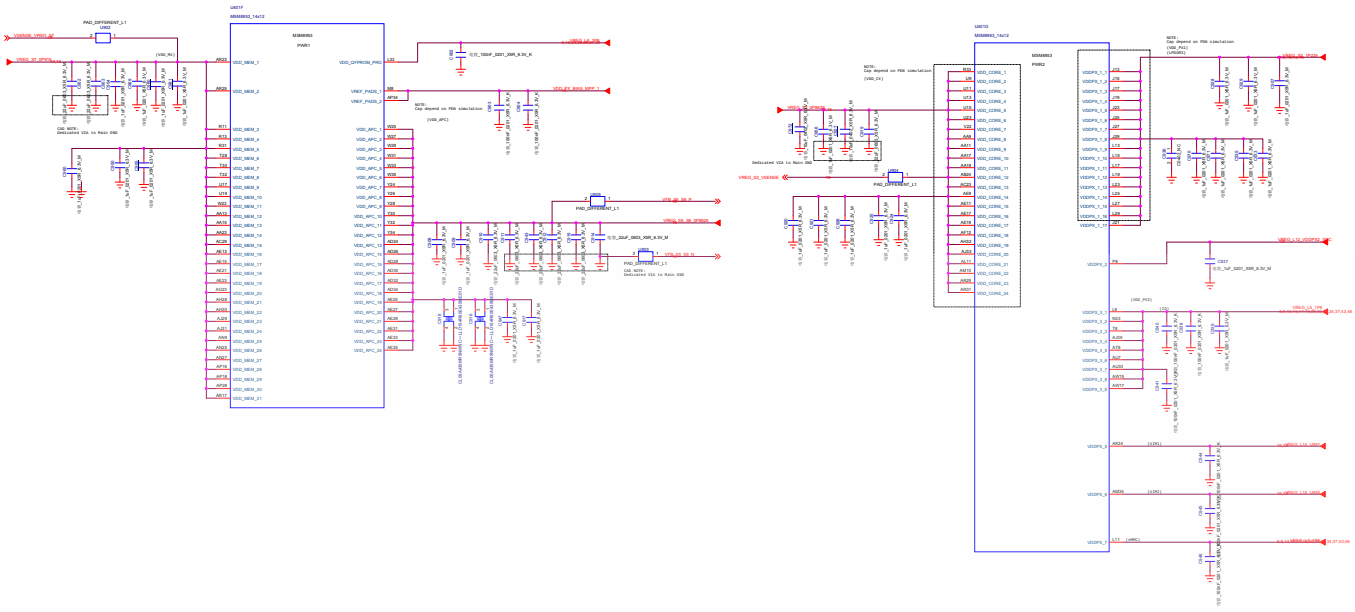

MSM8953
POWER1

iREPAIR

LABORATORIO TÉCNICO
MICROSOLDADURA

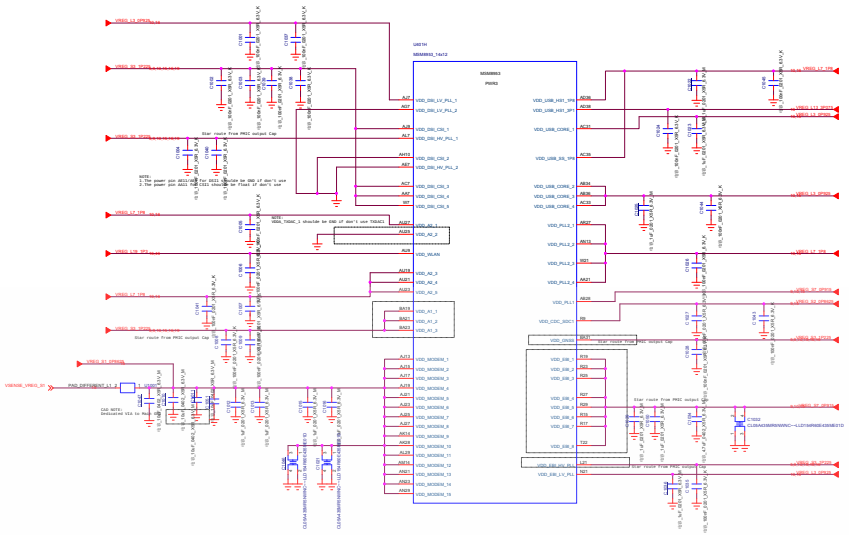

MSM8953
POWER2

iREPAIR
LABORATORIO TÉCNICO
MICROSOLDADURA

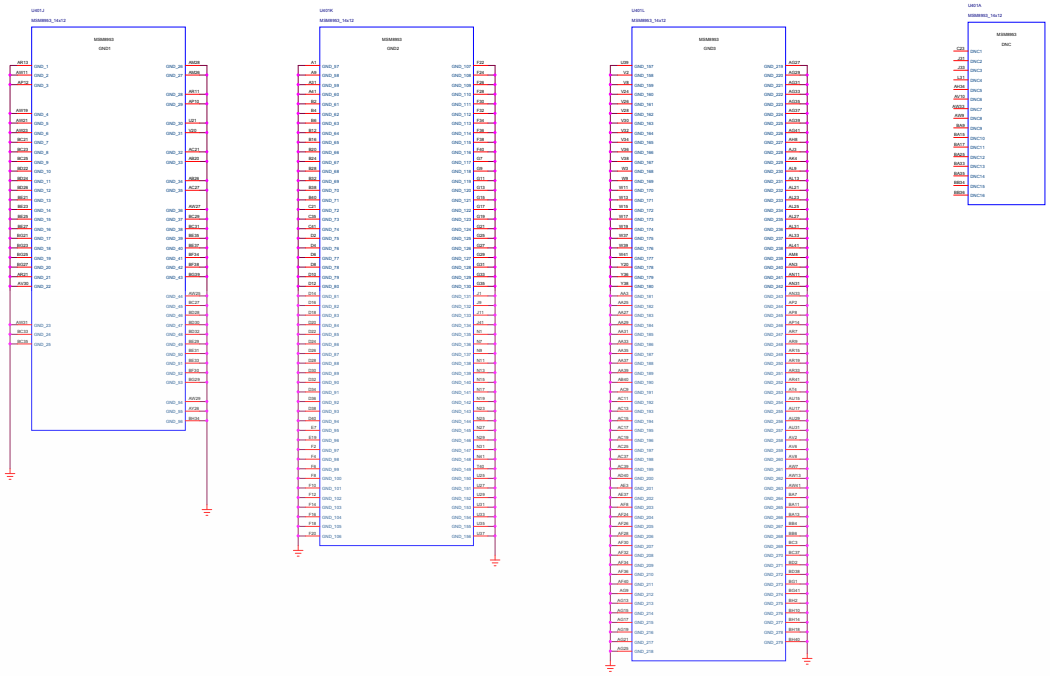

MSM8953
GND

iREPAIR
LABORATORIO TÉCNICO
MICROSOLDADURA

PMI_ON	connection to device without keyswitch	connection to device with keyswitch
CHG_EN	Pull up to VBB_CAP with 510ohm	Start PMU CHG_EN
DVCC_EN	Pull down to GND with 8ohm	Start PMU DVCC_EN
OPDO2	No connect for parallel charging: Connects to CHG EN pin to NFET gate up to VBB_CAP	100ohm pull down to gnd for parallel charging: Connects to CHG EN pin to NFET gate up to VBB_CAP

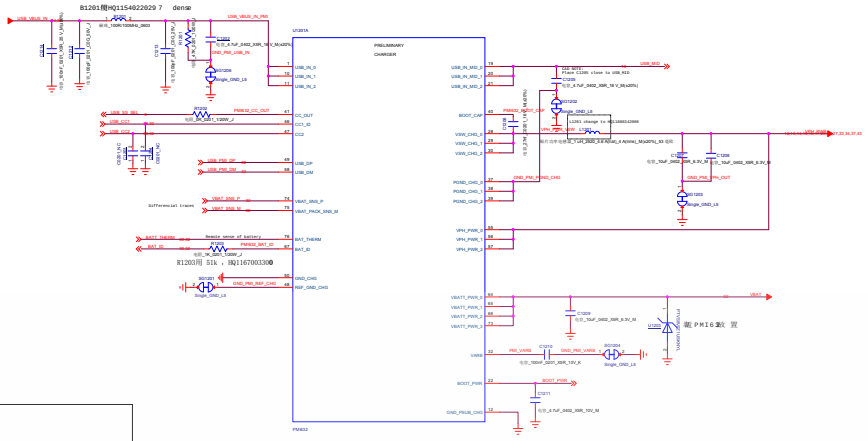

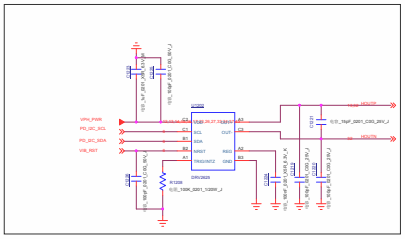

PMI632 Charger

iREPAIR
LABORATORIO TÉCNICO
MICROSOLDADURA

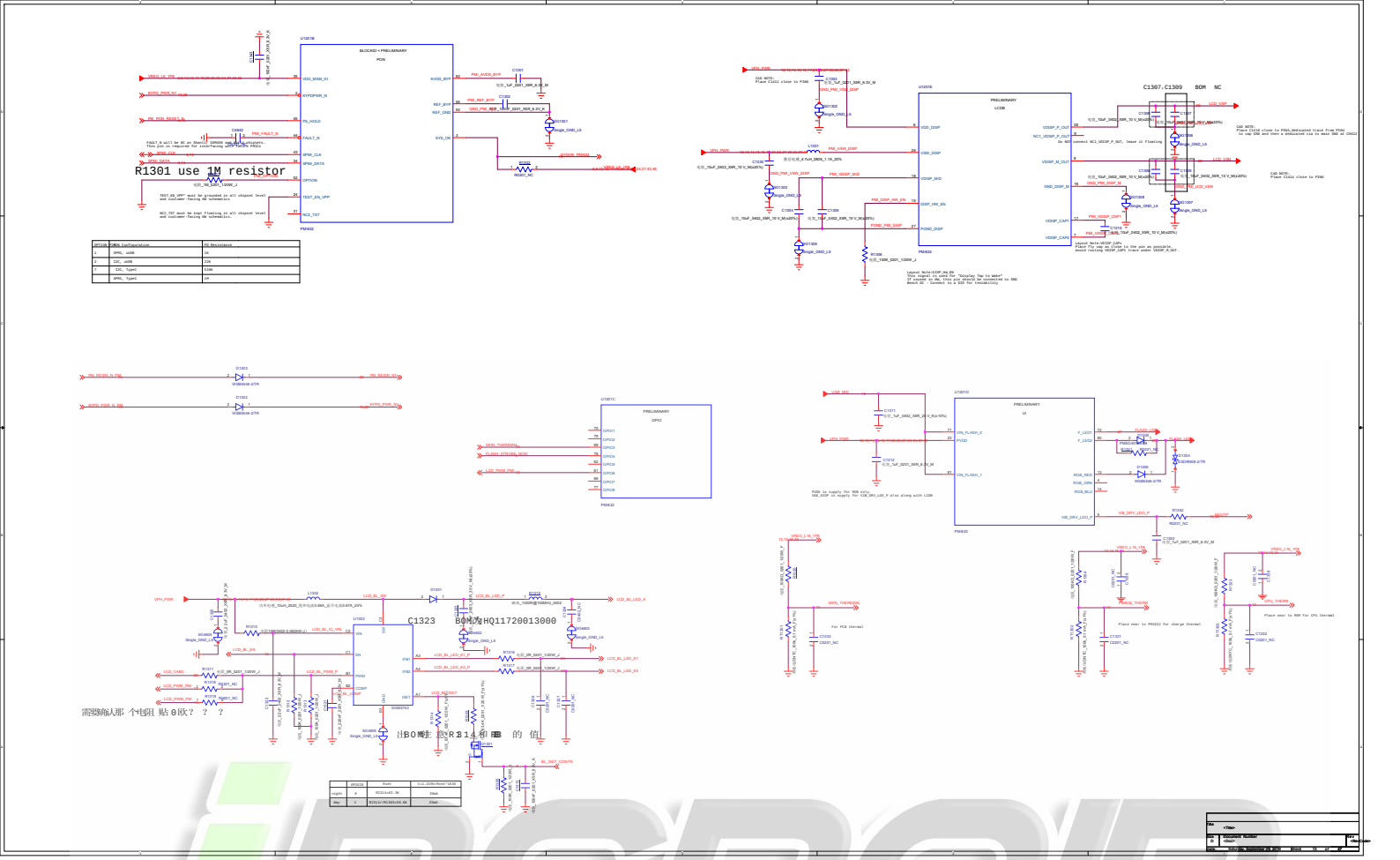

iREPAIR
LABORATORIO TÉCNICO
MICROSOLDADURA

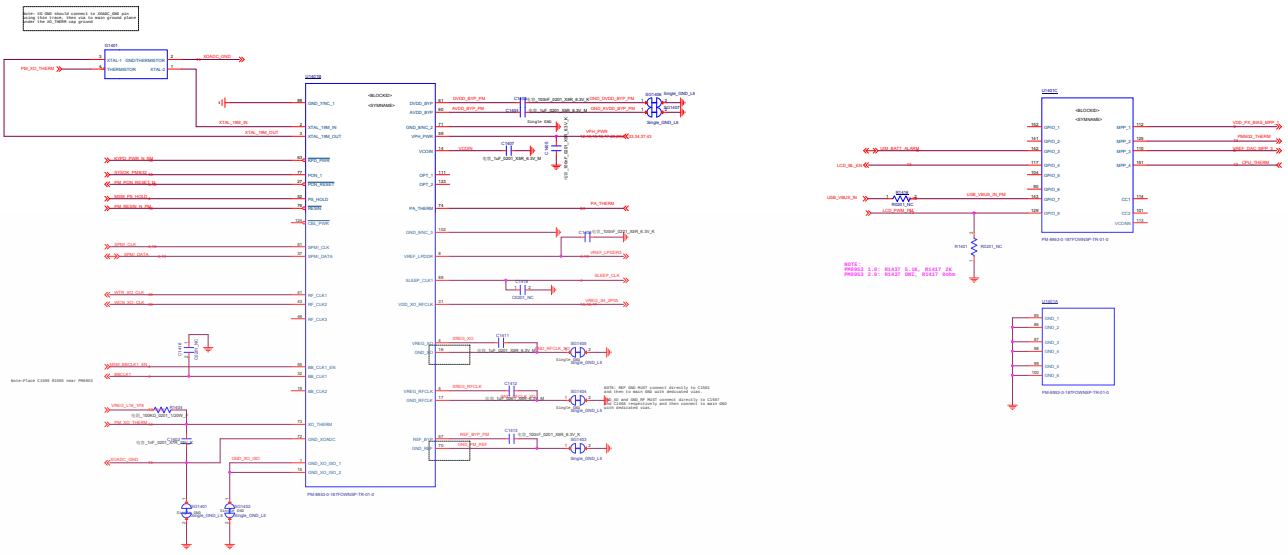

PM8953
Control/Interface

iREPAIR
LABORATORIO TÉCNICO
MICROSOLDADURA

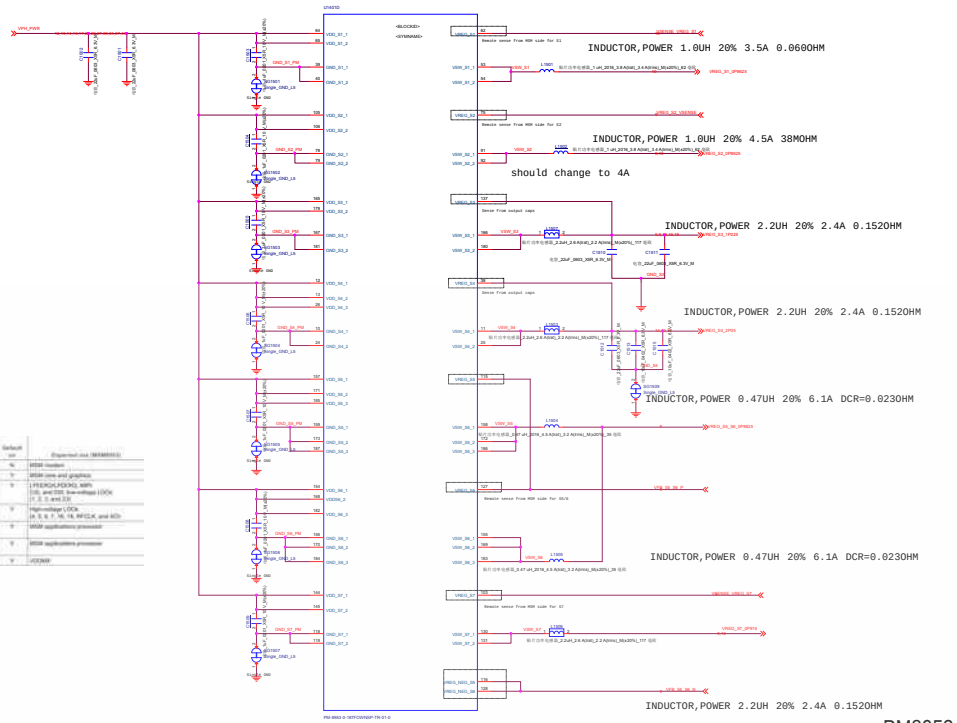

PM8953
SMPS

iREPAIR
LABORATORIO TÉCNICO
MICROSOLDADURA

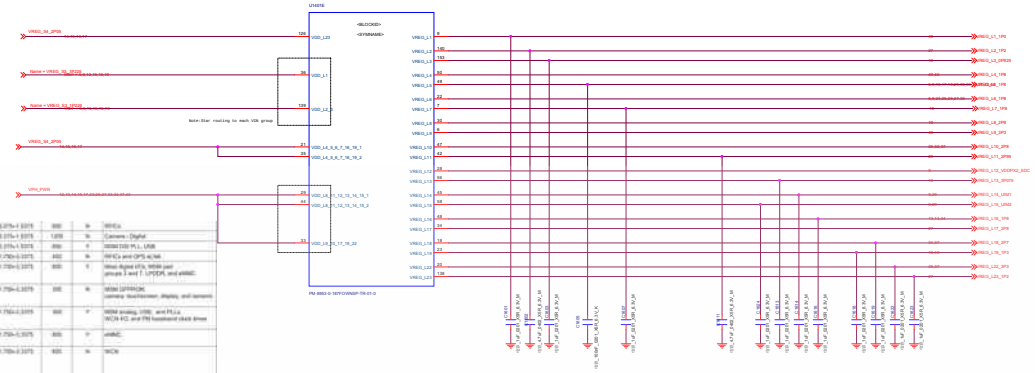

L1	PM835 LDO	1.0	1.0	0.375-1.537V	300	N	RFICs
L2	PM835 LDO	1.150	1.150	0.375-1.537V	1,200	N	Camera - Digital
L3	PM835 LDO	0.925	0.925	0.375-1.537V	300	Y	SGMII/100 PLL, USB
L4	PM835 LDO	1.850	1.850	1.750-3.337V	300	N	RFICs and GPS w/LNA
L5	PM835 LDO	1.850	1.850	1.750-3.337V	300	Y	Misc digital VFs, MSM pad groups 1 and 7, UFS/EF, and eMMC
L6	PM835 LDO	1.800	1.800	1.750-3.337V	300	N	MSM EPROM, camera, touchscreen, display, and sensors
L7	PM835 LDO	1.800	1.800	1.750-3.337V	300	Y	MSM analog, USB, and PLLs, WCN FC, and PM hardware clock timer
L8	PM835 LDO	2.900	2.900	1.750-3.337V	300	Y	eMMC
L9	PM835 LDO	Vout = 3.3 V for VBATF > 3.375 V; Vout = 3 V for VBATF < 3.375 V	3.000-3.300	1.750-3.337V	300	N	WCN

Function	Device type	Default V (V)	Specified range (V) (MSM/WCN)	Programmable range (V)	Rated current (mA)	Default ON	Expected use (MSM/WCN)
L10	PM835 LDO	3.0	3.0	1.75V-3.337V	150	N	Sensors and touchscreen
L11	PM835 LDO	2.950	2.950	1.75V-3.337V	150	Y	Micro SD
L12	PM835 LDO	2.950	1.8000-3.300	1.75V-3.337V	50	Y	MSM pad group 3 and SSC2
L13	PM835 LDO	3.125	3.125	1.75V-3.337V	150	Y	MSM USB pad 2 and PMIC and external codec audio
L14	PM835 LDO	1.800	1.8000	1.75V-3.337V	50	N	MSM pad group 5, dual-voltage UART, and NFC
L15	PM835 LDO	1.800	1.8000	1.75V-3.337V	50	N	MSM pad group 6 and dual-voltage UIM2
L16	PM835 LDO	1.800	1.800	1.75V-3.337V	0	N	PMIC HKADC
L17	PM835 LDO	2.950	2.950	1.75V-3.337V	300	N	Camera and display
L18	PM835 LDO	2.700	2.700	1.75V-3.337V	150	N	QTI RF transceiver
L19	MSS LDO	1.200	1.200	0.375-1.537V	300	N	MSM analog, WCN, and WDR
L20	Low-noise LDO	1.75	1.75	1.75-3.337V	5	Y	PMIC XO circuits
L21	Low-noise LDO	1.75	1.75	1.75-3.337V	5	N	PMIC HF clock buffers
L22	PM835 LDO	2.950	2.950	1.75V-3.337V	150	N	Camera - analog
L23	MSS LDO	1.15	1.15	0.375-1.537V	400	N	Camera - digital

PM8953
LDO

iREPAIR
LABORATORIO TÉCNICO
MICROSOLDADURA

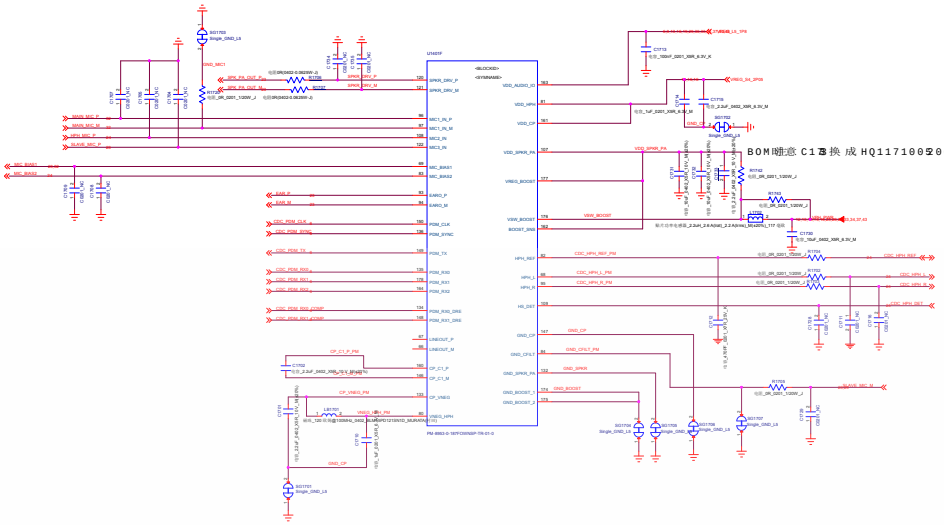

iREPAIR
LABORATORIO TÉCNICO
MICROSOLDADURA

Company: Huaqin	
Block Title	Test Points
Project	Tailor
Rev 1.0	
Date 2020-06-30	Sheet 36 of 37

iREPAIR

LABORATORIO TÉCNICO
MICROSOLDADURA

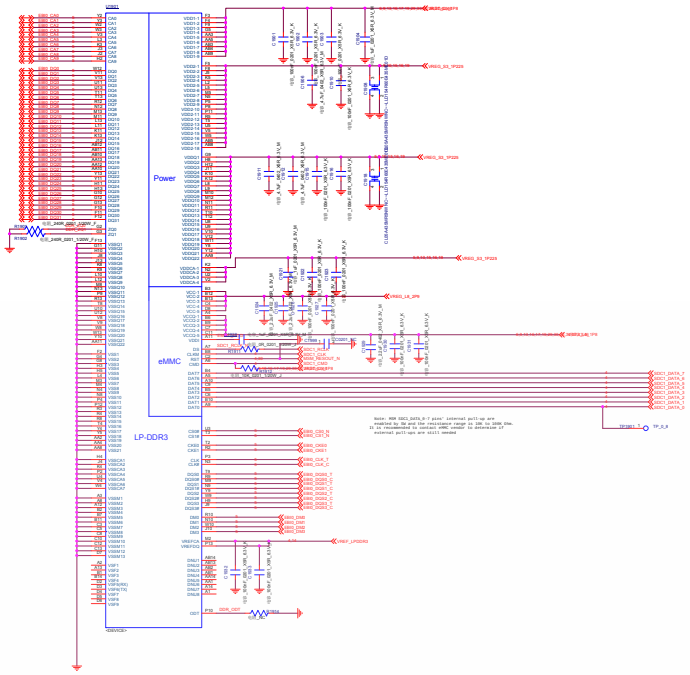

MEMORY(LPDDR3+EMMC V5.1)

iREPAIR
LABORATORIO TÉCNICO
MICROSOLDADURA

iREPAIR

LABORATORIO TÉCNICO
MICROSOLDADURA

iREPAIR

LABORATORIO TÉCNICO
MICROSOLDADURA

iREPAIR

LABORATORIO TÉCNICO
MICROSOLDADURA

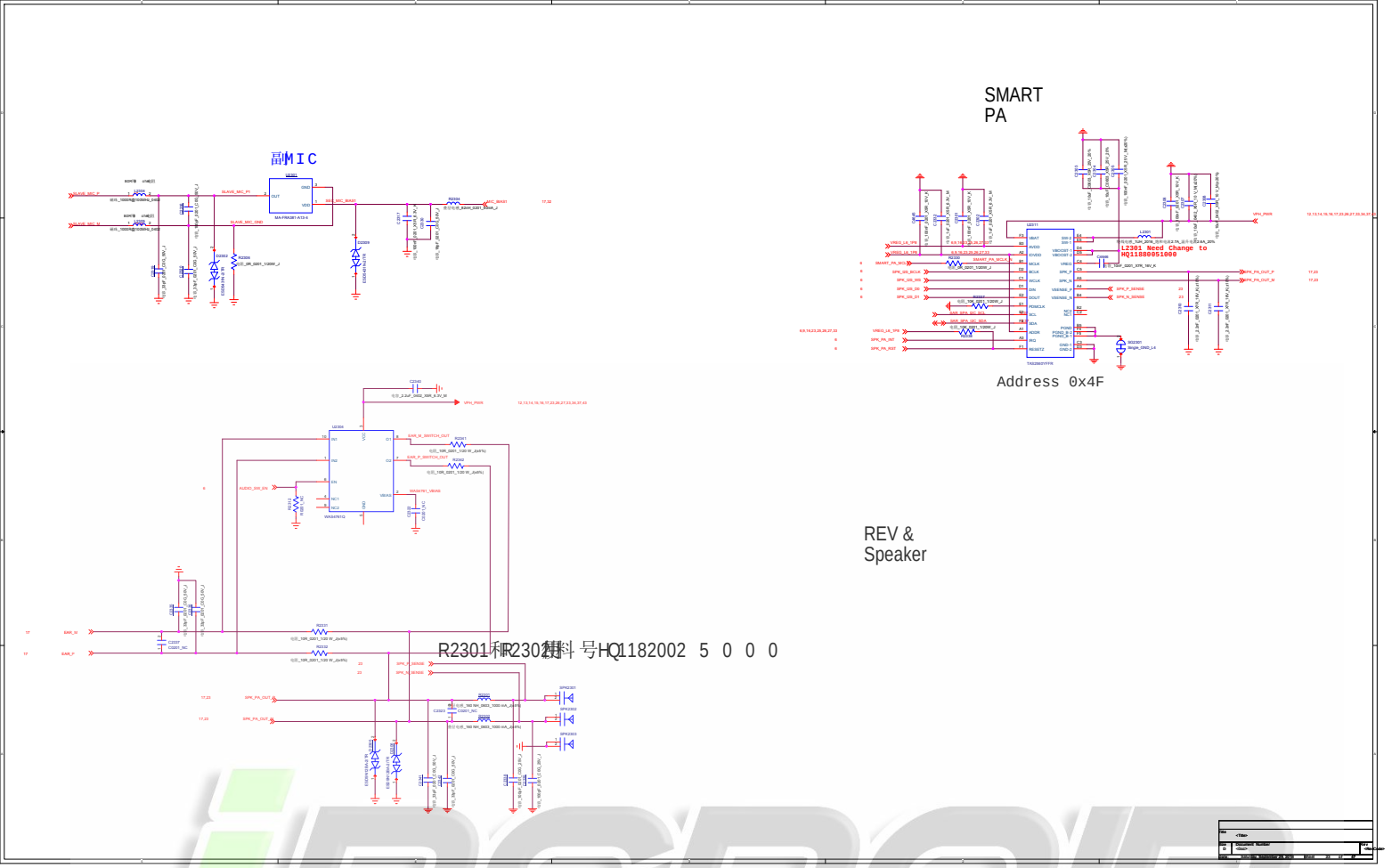

iREPAIR
LABORATORIO TÉCNICO
MICROSOLDADURA

AUDIO JACK

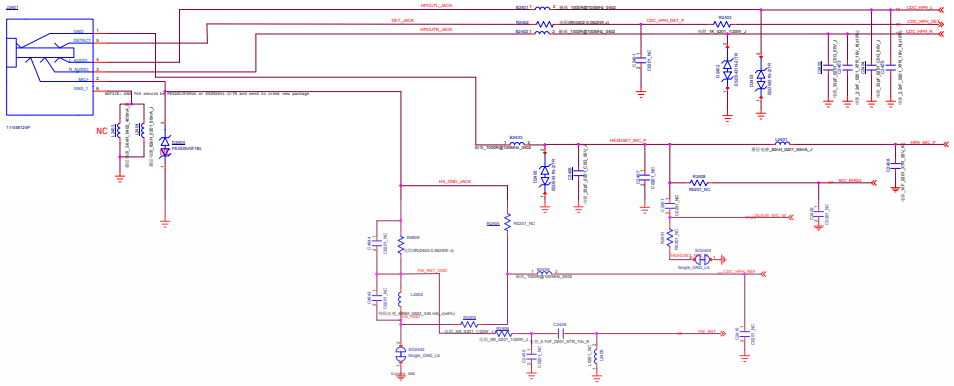

iREPAIR
LABORATORIO TÉCNICO
MICROSOLDADURA

ACCELEROMETER

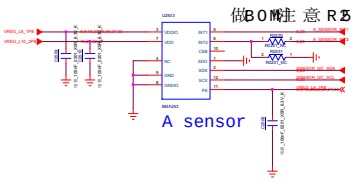

A sensor

做BOM时注意R230，R231的选取

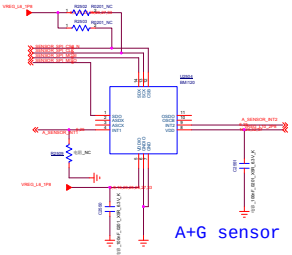

A+G sensor

address of AK09918 is 0Ch

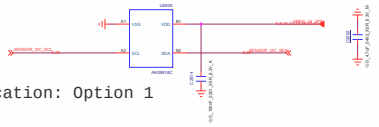

Location: Option 1

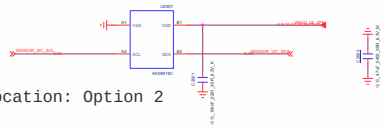

Location: Option 2

ALS/P SENSOR+Front Flash+Charge LED CONN

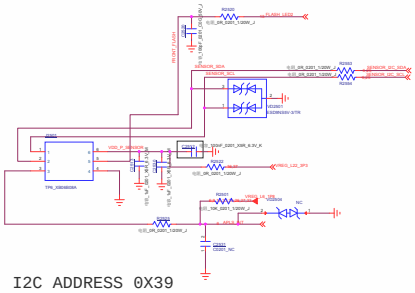

I2C ADDRESS 0X39

iREPAIR

LABORATORIO TÉCNICO MICROSOLDADURA

LCD MIPI Common Mode Filter

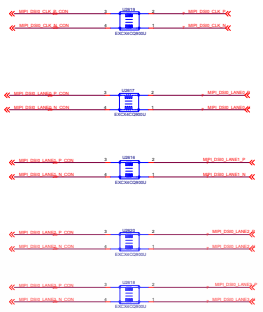

LCD/TP-Connector

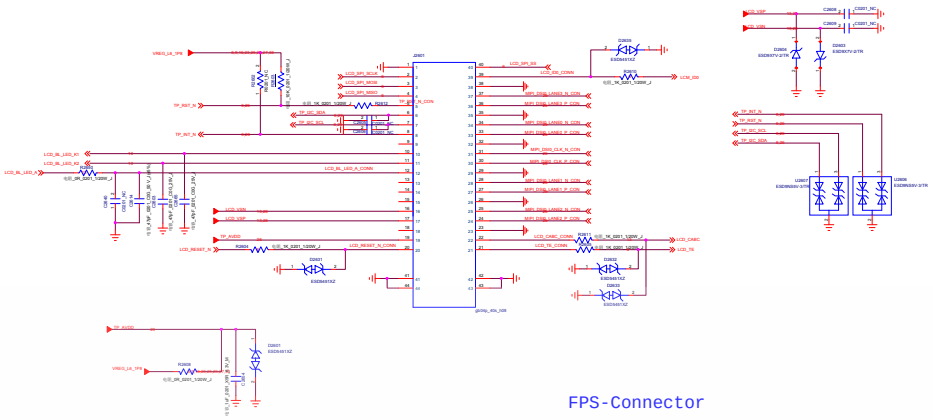

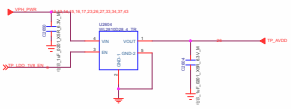

LDO should be WL2810D18-4/TR

FPS-Connector

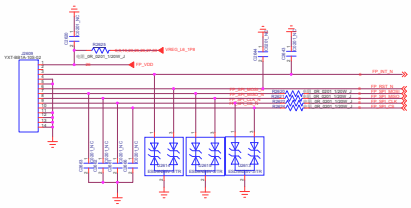

LDO should be WL2810D18-4/TR

iREPAIR

LABORATORIO TÉCNICO
MICROSOLDADURA

Front Camera 8MP

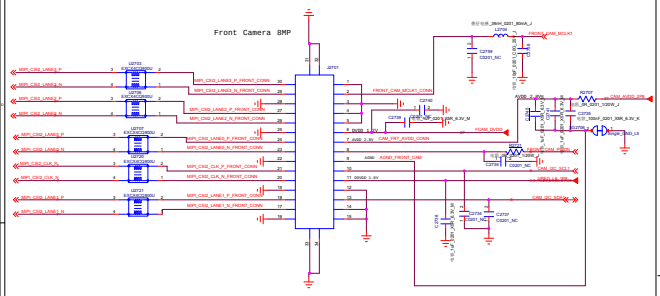

LDO

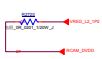

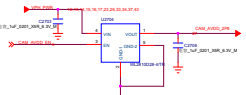

U2704换WL2820D2 8 HQ1115030900 0

前闪

后闪

出BOM时注意使用GCM评估的后闪光灯

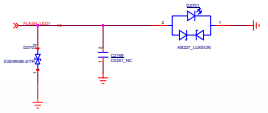

Main Rear Camera

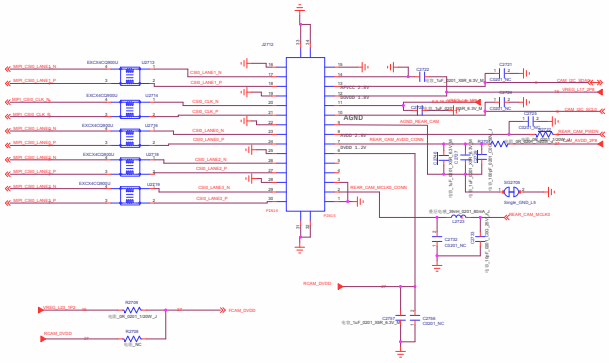

.Main/Slave Camera and Flash

iREPAIR

LABORATORIO TÉCNICO MICROSOLDADURA

音量 键&开关机 键

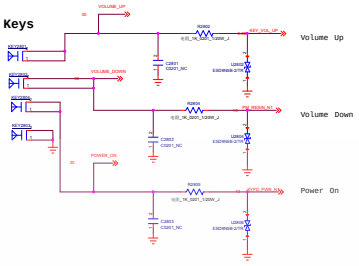

iREPAIR
LABORATORIO TÉCNICO
MICROSOLDADURA

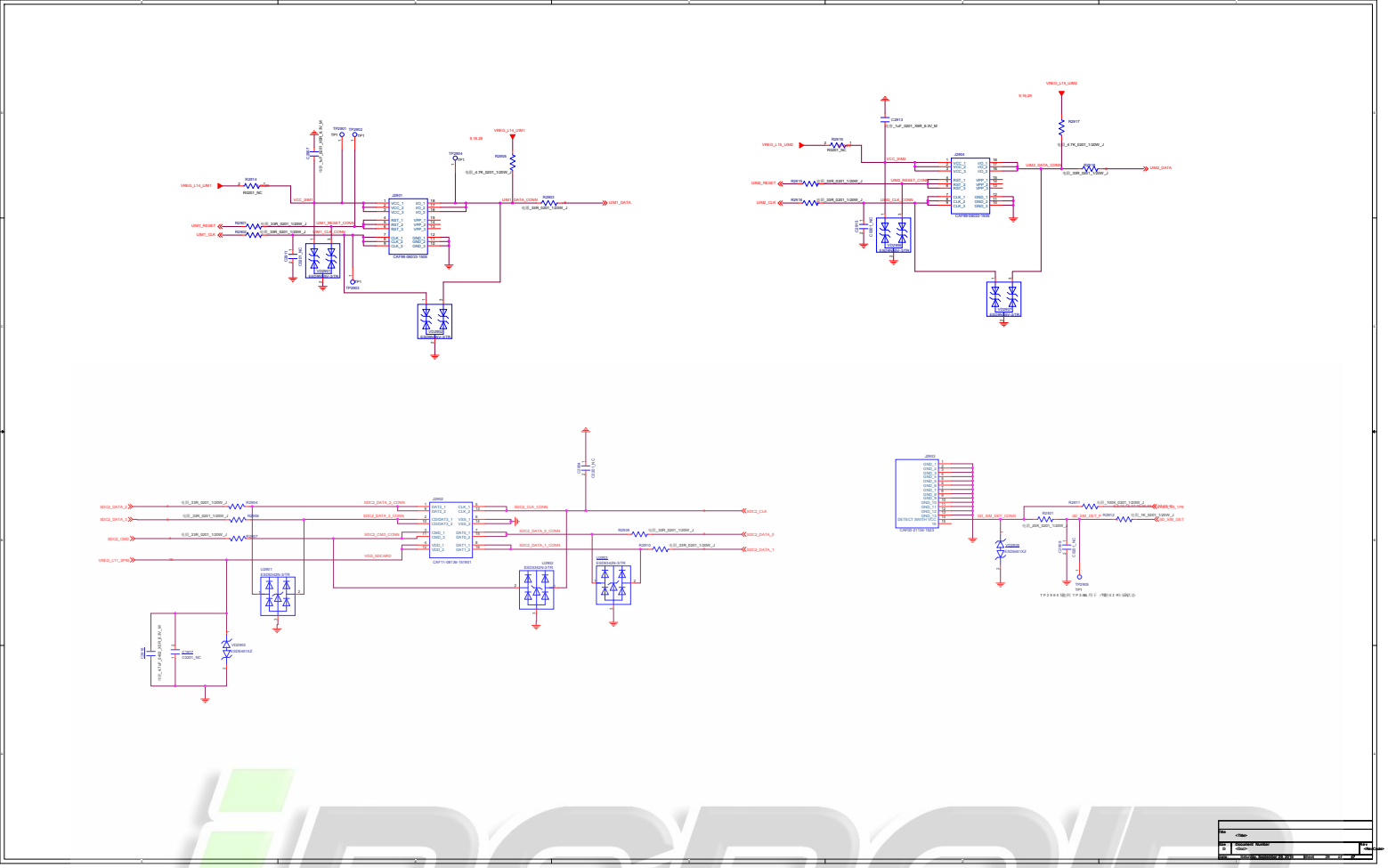

iREPAIR

LABORATORIO TÉCNICO
MICROSOLDADURA

PCBA AUTOMATIC TEST point

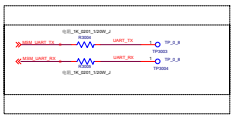

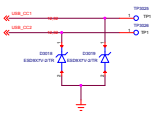

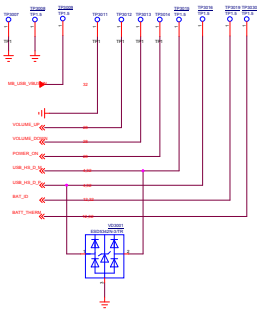

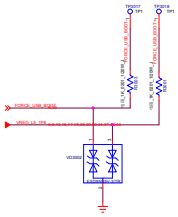

JTAG CONNECTOR

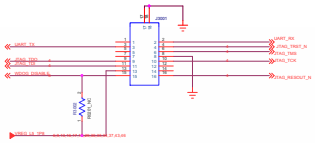

power key +volup to enter 9008 mode

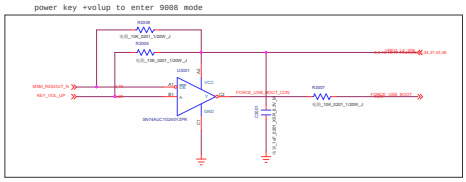

接地单 片 TOP

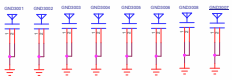

接地单 片 BOT

SMT MARK

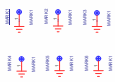

TP/GND/Shielding

iREPAIR

LABORATORIO TÉCNICO
MICROSOLDADURA

iREPAIR

LABORATORIO TÉCNICO
MICROSOLDADURA

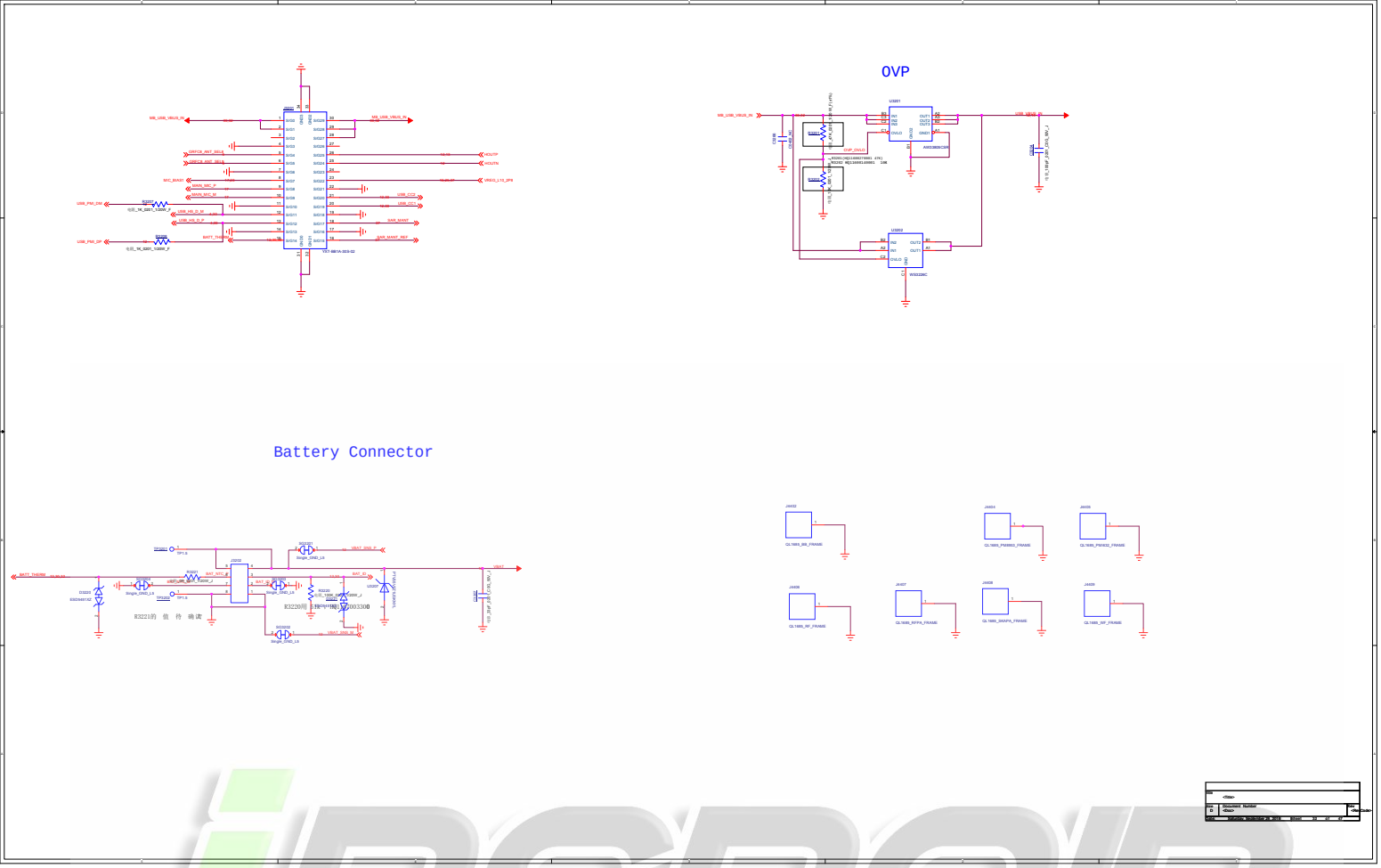

iREPAIR
LABORATORIO TÉCNICO
MICROSOLDADURA

PRIMARY_ANTENNA

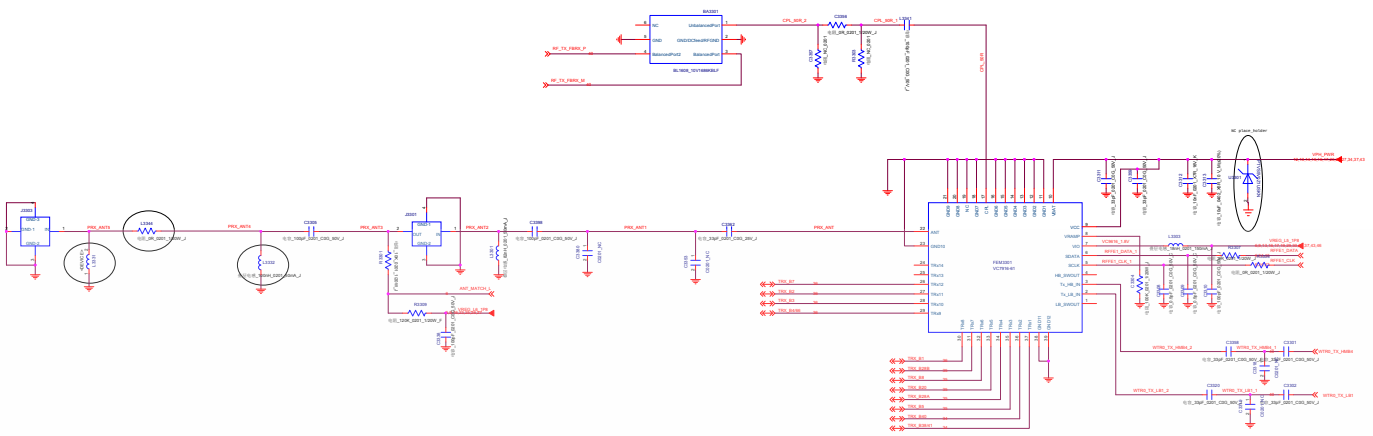

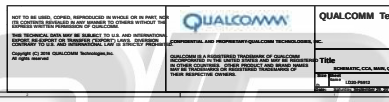

iREPAIR
LABORATORIO TÉCNICO
MICROSOLDADURA

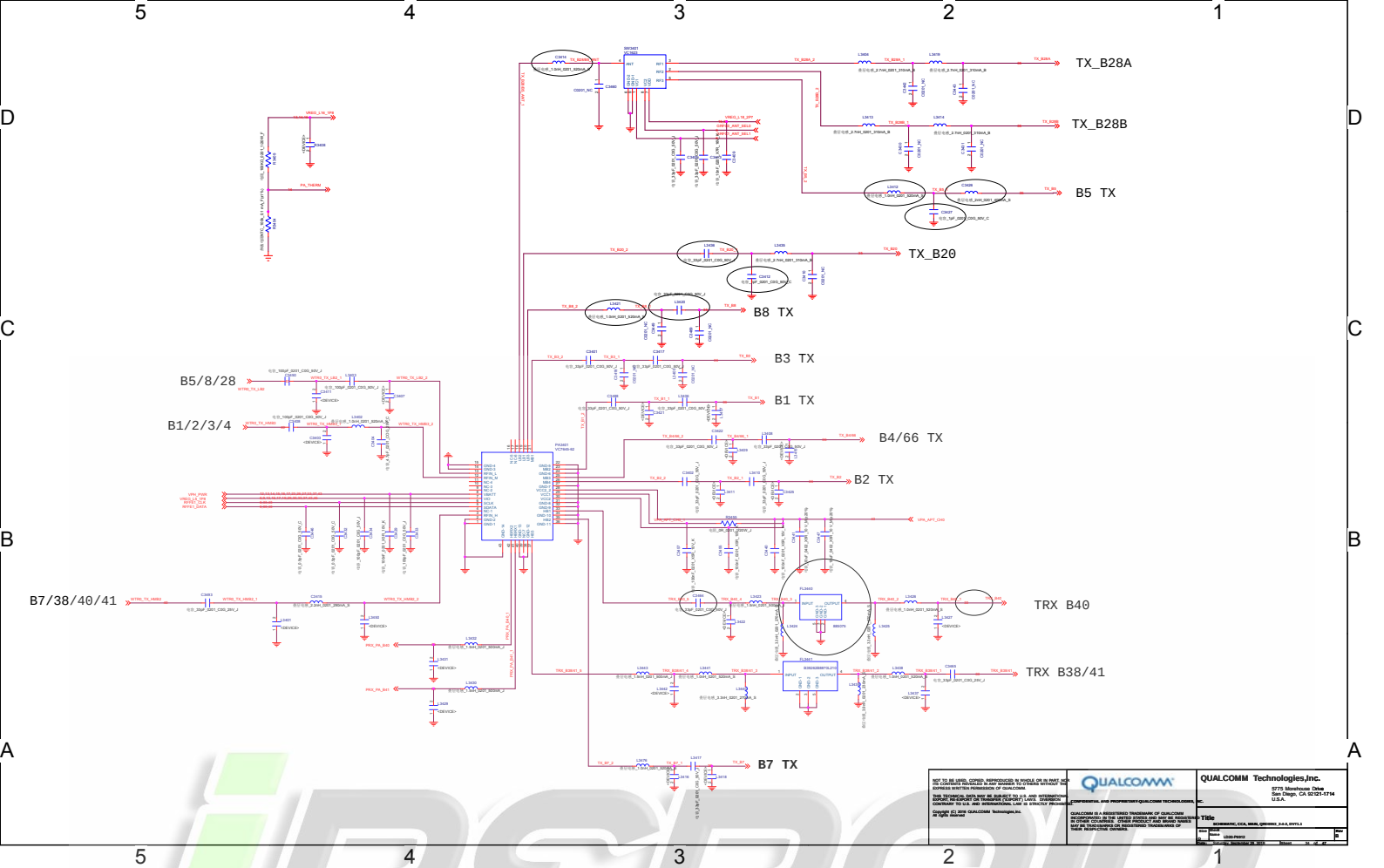

iREPAIR
LABORATORIO TÉCNICO
MICROSOLDADURA

B28B_DPX

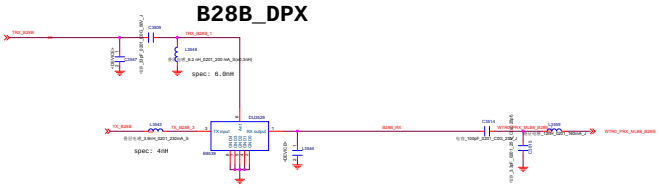

B5 DPX

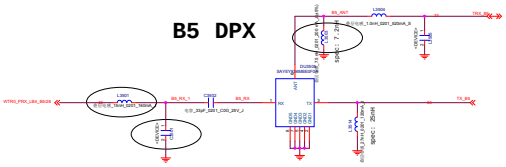

B28A_DPX

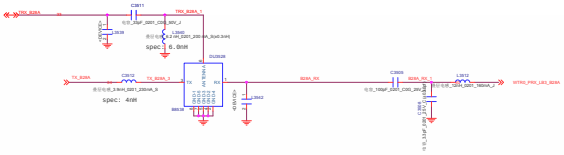

B8 DPX

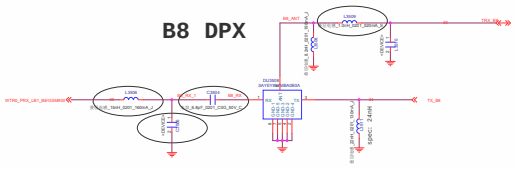

B20 DPX

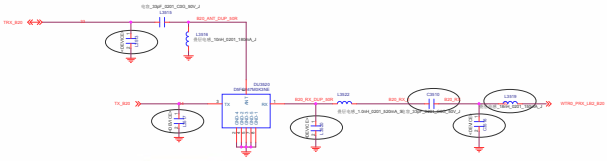

NOT TO BE USED, COPIED, REPRODUCED IN WHOLE OR IN PART, NOR ITS CONTENTS REVEALED IN ANY MANNER TO OTHERS WITHOUT THE EXPRESS WRITTEN PERMISSION OF QUALCOMM.

THIS TECHNICAL DATA MAY BE SUBJECT TO U.S. AND INTERNATIONAL EXPORT, RE-EXPORT OR TRANSFER ("EXPORT") LAWS. DIVERSION CONTRARY TO U.S. AND INTERNATIONAL LAW IS STRICTLY PROHIBITED.

Copyright (C) 2016 QUALCOMM Technologies,Inc.
All rights reserved

QUALCOMM IS A REGISTERED TRADEMARK OF QUALCOMM INCORPORATED IN THE UNITED STATES AND MAY BE REGISTERED IN OTHER COUNTRIES. OTHER PRODUCT AND BRAND NAMES MAY BE TRADEMARKS OR REGISTERED TRADEMARKS OF THEIR RESPECTIVE OWNERS.

CONFIDENTIAL AND PROPRIETARY QUALCOMM TECHNOLOGIES, INC.

QUALCOMM Technologies,Inc.
5775 Morehouse Drive
San Diego, CA 92121-1714
U.S.A.

Title
SCHEMATIC_CCG_MAIN_QRD8992_3-4-0_DVT1.1

Size: D | Number: 80-NA416-1 | Rev: B | Date: Wednesday, July 20, 2016 | Sheet: 36 of 38

iREPAIR
LABORATORIO TÉCNICO
MICROSOLDADURA

B1 DPX

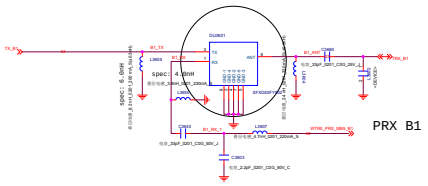

BM	HQ code	Description	Vendor
Super Bee	80-L0R02-7888	0603,0201,0402	TAIYO
Brazil & Latam	80-L0R00-7888	0603,0201,0402	TAIYO

B3 DPX

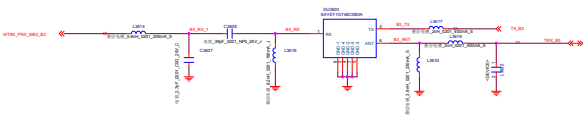

B40 DPX

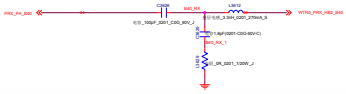

B4/66 DPX

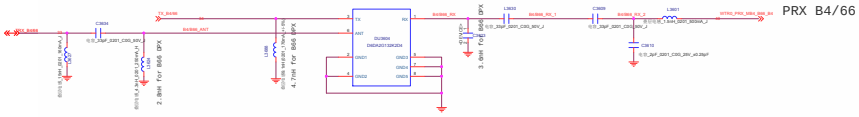

B41 DPX

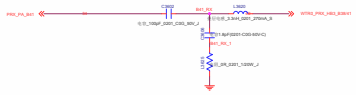

B2 DPX

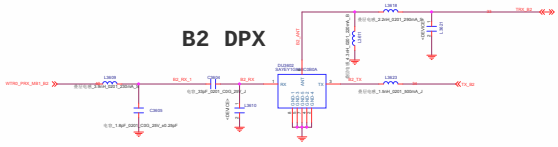

B7 DPX

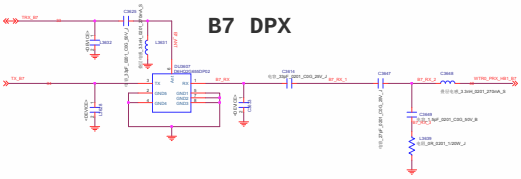

NOT TO BE USED, COPIED, REPRODUCED IN WHOLE OR IN PART, NOR ITS CONTENTS DISCLOSED IN ANY MANNER TO OTHERS WITHOUT THE EXPRESS WRITTEN PERMISSION OF QUALCOMM.

THIS TECHNICAL DATA MAY BE SUBJECT TO U.S. AND INTERNATIONAL EXPORT, RE-EXPORT OR TRANSFER ("EXPORT") LAWS. DIVERSION CONTRARY TO U.S. AND INTERNATIONAL LAW IS STRICTLY PROHIBITED.

Copyright (C) 2016 QUALCOMM Technologies,Inc.
All rights reserved

QUALCOMM

CONFIDENTIAL AND PROPRIETARY QUALCOMM TECHNOLOGIES, INC.

QUALCOMM IS A REGISTERED TRADEMARK OF QUALCOMM INCORPORATED IN THE UNITED STATES AND MAY BE REGISTERED IN OTHER COUNTRIES. OTHER PRODUCT AND BRAND NAMES MAY BE TRADEMARKS OR REGISTERED TRADEMARKS OF THEIR RESPECTIVE OWNERS.

QUALCOMM Technologies,Inc.
5775 Morehouse Drive
San Diego, CA 92121-1714
U.S.A.

Title
SCHEMATIC, CCG, MAIN, QRD8955 ,3-4-5, DVT1.1

Size | Number | Rev
D | 80-P8972-2 | A

Date: Sunday, November 13, 2016 | Sheet 36 of 37

iREPAIR
LABORATORIO TÉCNICO
MICROSOLDADURA

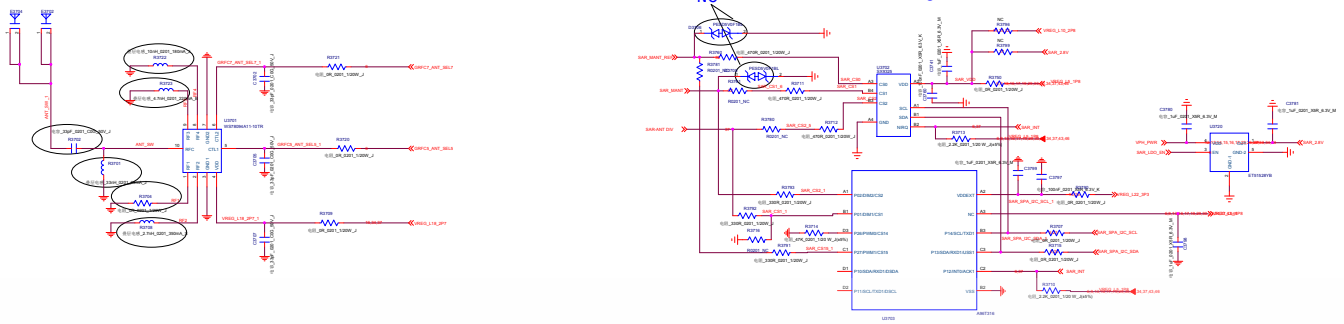

囊 SX931 1 A96T356设计

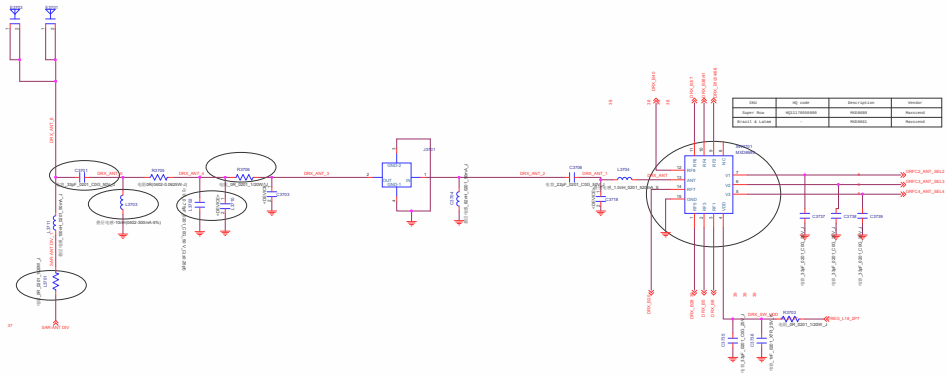

DS2	HQ code	Emcy/qcl.un	Vendor
Super Row	HQ1117000000	H00000	Nuvoiced
Brian1 & Lalow		H00000	Nuvoiced

NOT TO BE USED, COPIED, REPRODUCED IN WHOLE OR IN PART, NOR ITS CONTENTS REVEALED IN ANY MANNER TO OTHERS WITHOUT THE EXPRESS WRITTEN PERMISSION OF QUALCOMM.

THIS TECHNICAL DATA MAY BE SUBJECT TO U.S. AND INTERNATIONAL EXPORT, RE-EXPORT OR TRANSFER ("EXPORT") LAWS. DIVERSION CONTRARY TO U.S. AND INTERNATIONAL LAW IS STRICTLY PROHIBITED.

Copyright (C) 2016 QUALCOMM Technologies,Inc.
All rights reserved

QUALCOMM

CONFIDENTIAL AND PROPRIETARY QUALCOMM TECHNOLOGIES, INC.

QUALCOMM IS A REGISTERED TRADEMARK OF QUALCOMM INCORPORATED IN THE UNITED STATES AND MAY BE REGISTERED IN OTHER COUNTRIES. OTHER PRODUCT AND BRAND NAMES MAY BE TRADEMARKS OR REGISTERED TRADEMARKS OF THEIR RESPECTIVE OWNERS.

QUALCOMM Technologies,Inc.
5775 Morehouse Drive
San Diego, CA 92121-1714
U.S.A.

Title
SCHEMATIC, CCA, MAIN, QRD8962 3-4-5, DVT1.1

Size	Number	Rev
D	80-Y3000-2	A

Date: Wednesday, July 20, 2016 Sheet 1 of 37

iREPAIR
LABORATORIO TÉCNICO
MICROSOLDADURA

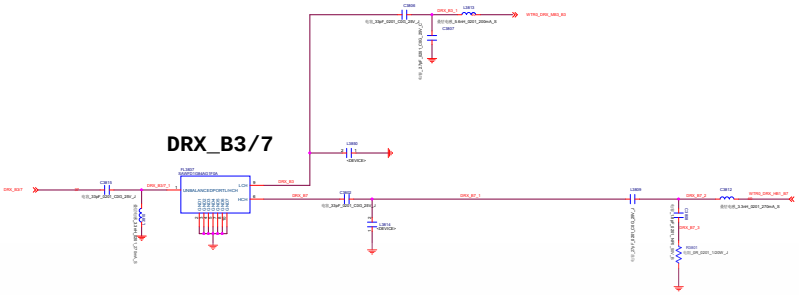
DRX_B3/7

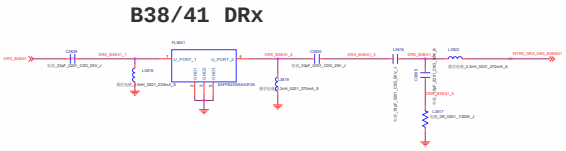
B38/41 DRx

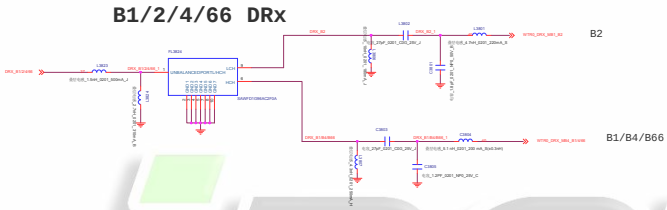
B1/2/4/66 DRx
B2
B1/B4/B66

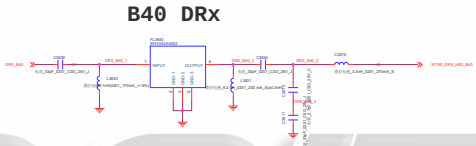
B40 DRx

iREPAIR

LABORATORIO TÉCNICO
MICROSOLDADURA

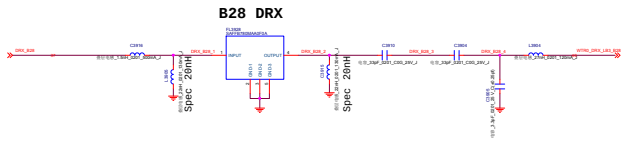

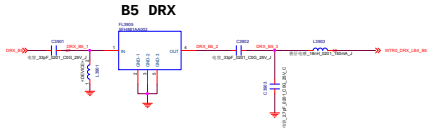

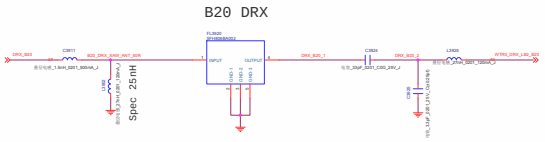

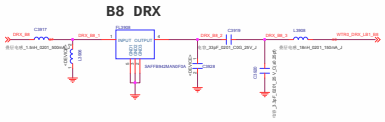

DRX LB

NOT TO BE USED, COPIED, REPRODUCED IN WHOLE OR IN PART, NOR DISCLOSED TO OTHERS IN WHOLE OR IN PART, TO OTHERS WITHOUT THE EXPRESS WRITTEN PERMISSION OF QUALCOMM.

THIS TECHNICAL DATA MAY BE SUBJECT TO U.S. AND INTERNATIONAL EXPORT, RE-EXPORT OR TRANSFER ("EXPORT") LAWS. DIVERSION CONTRARY TO U.S. AND INTERNATIONAL LAW IS STRICTLY PROHIBITED.

Copyright (C) 2016 QUALCOMM Technologies,Inc.
All rights reserved

CONFIDENTIAL AND PROPRIETARY-QUALCOMM TECHNOLOGIES, INC.

QUALCOMM IS A REGISTERED TRADEMARK OF QUALCOMM INCORPORATED IN THE UNITED STATES AND MAY BE REGISTERED OR PENDING REGISTRATION IN OTHER COUNTRIES. OTHER MARKS MAY BE TRADEMARKS OR REGISTERED TRADEMARKS OF THEIR RESPECTIVE OWNERS.

QUALCOMM

QUALCOMM Technologies,Inc.
5775 Morehouse Drive
San Diego, CA 92121-1714
U.S.A.

Title
SCHEMATIC, CCG, MAIN, QRD8955_3-0-0, DVT,L1

Size: Document Number: 80-Y1611-2 Rev: 80
Date: Sunday, December 18, 2016 Sheet: 37 of 37

iREPAIR
LABORATORIO TÉCNICO MICROSOLDADURA

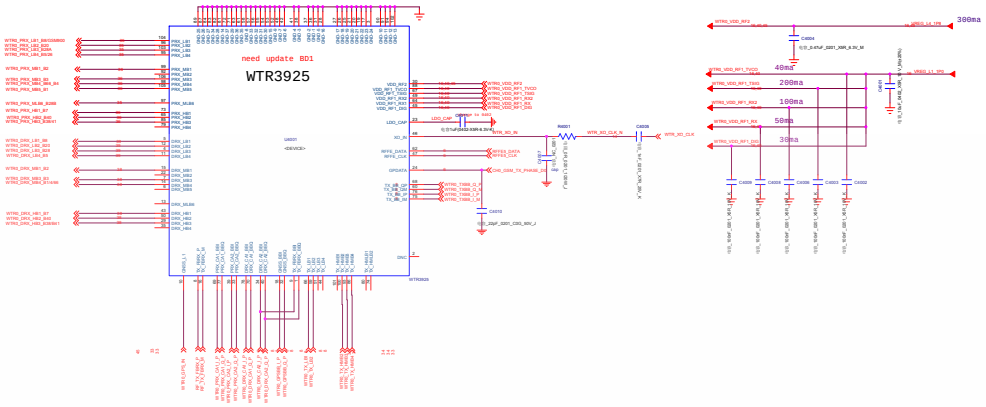

NOT TO BE USED, COPIED, REPRODUCED IN WHOLE OR IN PART, NOR ITS CONTENTS REVEALED IN ANY MANNER TO OTHERS WITHOUT THE EXPRESS WRITTEN PERMISSION OF QUALCOMM.

THIS TECHNICAL DATA MAY BE SUBJECT TO U.S. AND INTERNATIONAL EXPORT, RE-EXPORT OR TRANSFER ("EXPORT") LAWS. DIVERSION CONTRARY TO U.S. AND INTERNATIONAL LAW IS STRICTLY PROHIBITED.

Copyright (C) 2010 QUALCOMM Technologies,Inc.
All rights reserved

CONFIDENTIAL AND PROPRIETARY QUALCOMM TECHNOLOGIES, INC.

QUALCOMM IS A REGISTERED TRADEMARK OF QUALCOMM INCORPORATED IN THE UNITED STATES AND MAY BE REGISTERED IN OTHER COUNTRIES. OTHER PRODUCT AND BRAND NAMES MAY BE TRADEMARKS OR REGISTERED TRADEMARKS OF THEIR RESPECTIVE OWNERS.

QUALCOMM Technologies,Inc.
5775 Morehouse Drive
San Diego, CA 92121-1714
U.S.A.

Title
SCHEMATIC, CCA, MAIN, QRD8955 ,3-4-5, DVT,L1

Size	Document Number		Rev
	80-Y2000-1		A
Date: Tuesday, November 16, 2010	Sheet	45 of 50	

iREPAIR
LABORATORIO TÉCNICO
MICROSOLDADURA

Title	<Title>
Size A	Document Number <Doc>
Rev	<RevCo
Date: Saturday, September 29, 2018	Sheet 41 of 47

iREPAIR
LABORATORIO TÉCNICO
MICROSOLDADURA

Title	<Title>
Size A	Document Number <Doc>
Rev	<RevCo
Date: Saturday, September 29, 2018	Sheet 42 of 47

iREPAIR
LABORATORIO TÉCNICO
MICROSOLDADURA

QET4101

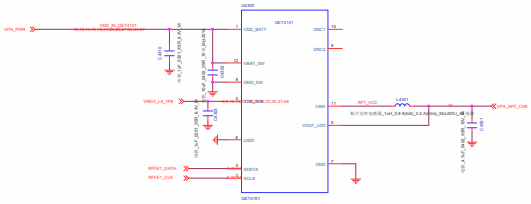

iREPAIR
LABORATORIO TÉCNICO
MICROSOLDADURA

WIFI 2.4G

E4405 NC

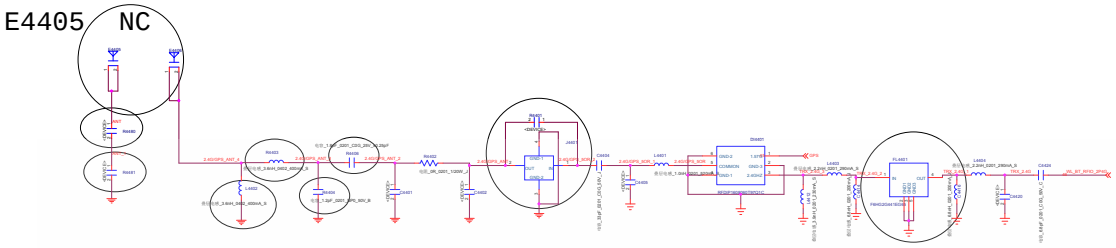

WLAN_FEM

NOT TO BE USED, COPIED, REPRODUCED IN WHOLE OR IN PART, NOR ITS CONTENTS REVEALED IN ANY MANNER TO OTHERS WITHOUT THE EXPRESS WRITTEN PERMISSION OF QUALCOMM.

THIS TECHNICAL DATA MAY BE SUBJECT TO U.S. AND INTERNATIONAL EXPORT, RE-EXPORT OR TRANSFER ("EXPORT") LAWS. DIVERSION CONTRARY TO U.S. AND INTERNATIONAL LAW IS STRICTLY PROHIBITED.

Copyright (C) 2016 QUALCOMM Technologies,Inc.
All rights reserved

CONFIDENTIAL AND PROPRIETARY QUALCOMM TECHNOLOGIES, INC.

QUALCOMM IS A REGISTERED TRADEMARK OF QUALCOMM INCORPORATED IN THE UNITED STATES AND MAY BE REGISTERED IN OTHER COUNTRIES. OTHER PRODUCT AND BRAND NAMES MAY BE TRADEMARKS OR REGISTERED TRADEMARKS OF THEIR RESPECTIVE OWNERS.

QUALCOMM

QUALCOMM Technologies,Inc.
5775 Morehouse Drive
San Diego, CA 92121-1714
U.S.A.

Title
SCHEMATIC, CCA, MAIN, QRD8953 J-4-0, DVT-L1

Size: Document Number: 80-Y8114-1 Rev: A
Date: Sunday, November 13, 2016 Sheet 45 of 87

iREPAIR

LABORATORIO TÉCNICO
MICROSOLDADURA

GPS

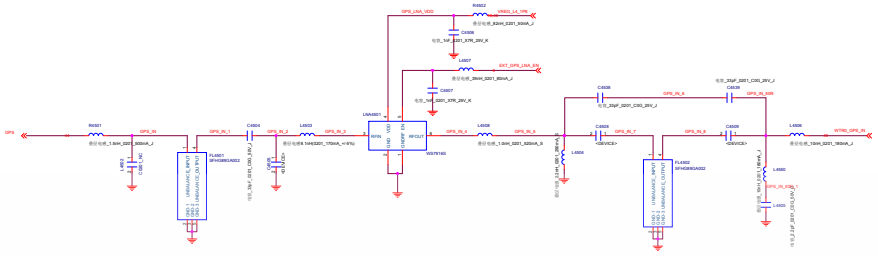

WLAN_FEM

NOT TO BE USED, COPIED, REPRODUCED IN WHOLE OR IN PART, NOR ITS CONTENTS REVEALED IN ANY MANNER TO OTHERS WITHOUT THE EXPRESS WRITTEN PERMISSION OF QUALCOMM.

THIS TECHNICAL DATA MAY BE SUBJECT TO U.S. AND INTERNATIONAL EXPORT, RE-EXPORT OR TRANSFER ("EXPORT") LAWS. DIVERSION CONTRARY TO U.S. AND INTERNATIONAL LAW IS STRICTLY PROHIBITED.

Copyright (C) 2016 QUALCOMM Technologies,Inc.
All rights reserved

CONFIDENTIAL AND PROPRIETARY QUALCOMM TECHNOLOGIES, INC.

QUALCOMM IS A REGISTERED TRADEMARK OF QUALCOMM INCORPORATED IN THE UNITED STATES AND MAY BE REGISTERED IN OTHER COUNTRIES. OTHER PRODUCT AND BRAND NAMES MAY BE TRADEMARKS OR REGISTERED TRADEMARKS OF THEIR RESPECTIVE OWNERS.

QUALCOMM

QUALCOMM Technologies,Inc.
5775 Morehouse Drive
San Diego, CA 92121-1714
U.S.A.

Title
SCHEMATIC_CCG_MAIN_QRD8953_3-4-0_DVT1.1

Size | Number | Rev
D | 80-P8412-2 | A

Date: Wednesday, July 20, 2016 | Sheet 45 of 87

iREPAIR
LABORATORIO TÉCNICO
MICROSOLDADURA

WCN3615

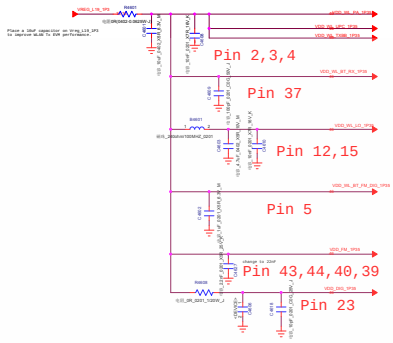

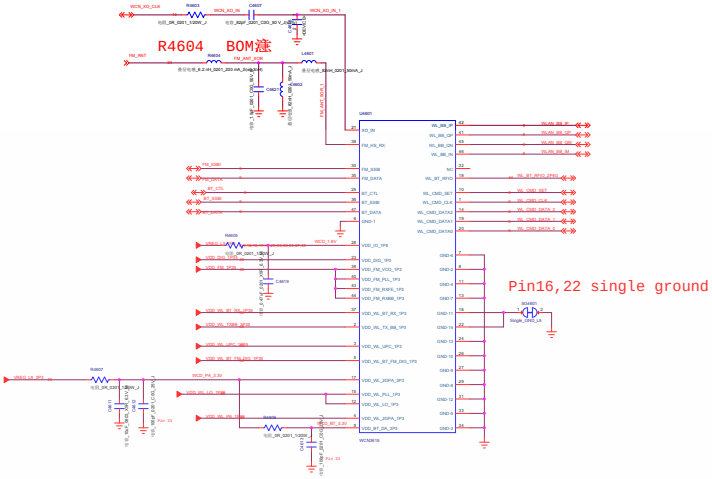

WCN3680B

NOT TO BE USED, COPIED, REPRODUCED IN WHOLE OR IN PART, NOR ITS CONTENTS REVEALED IN ANY MANNER TO OTHERS WITHOUT THE EXPRESS WRITTEN PERMISSION OF QUALCOMM.

THIS TECHNICAL DATA MAY BE SUBJECT TO U.S. AND INTERNATIONAL EXPORT, RE-EXPORT OR TRANSFER (“EXPORT”) LAWS. DIVERSION CONTRARY TO U.S. AND INTERNATIONAL LAW IS STRICTLY PROHIBITED.

Copyright (C) 2016 QUALCOMM Technologies,Inc.
All rights reserved

CONFIDENTIAL AND PROPRIETARY QUALCOMM TECHNOLOGIES, INC.

QUALCOMM IS A REGISTERED TRADEMARK OF QUALCOMM INCORPORATED IN THE UNITED STATES AND MAY BE REGISTERED IN OTHER COUNTRIES. OTHER PRODUCT AND BRAND NAMES MAY BE TRADEMARKS OR REGISTERED TRADEMARKS OF THEIR RESPECTIVE OWNERS.

QUALCOMM Technologies,Inc.
5775 Morehouse Drive
San Diego, CA 92121-1714
U.S.A.

Title
SCHEMATIC_CCA_MAIN_QRD8955_3-4-0_DVT1.1

Size | Number | Rev
A | 1000PM02 | A

Date: Thursday, August 18, 2016 | Sheet 49 of 49

iREPAIR
LABORATORIO TÉCNICO MICROSOLDADURA